ISSN: 0128-7680
Pertanika J. Sci. & Technol. **18 (1)**: 61 – 76 (2010) © Universiti Putra Malaysia Press

Modelling and Simulation of Vibration and Input Tracking Control of a Single-Link Flexible Manipulator

Mohd Ashraf Ahmad[1*] and Zaharuddin Mohamed[2]
[1]Faculty of Electrical and Electronics Engineering,
Universiti Malaysia Pahang, 25000 Kuantan, Pahang, Malaysia
[2]Faculty of Electrical Engineering, Universiti Teknologi Malaysia,
81310 Skudai, Johor, Malaysia
[*]E-mail: mashraf@ump.edu.my

ABSTRACT

This paper presents investigations into the development of control schemes for end-point vibration suppression and input tracking of a flexible manipulator. A constrained planar single-link flexible manipulator is considered and the dynamic model of the system is derived using the assumed mode method. To study the effectiveness of the controllers, a Linear Quadratic Regulator (LQR) was initially developed for control of rigid body motion. This is then extended to incorporate a non-collocated PID controller and a feedforward controller based on input shaping techniques to control vibration (flexible motion) of the system. For feedforward controller, positive and modified specified negative amplitude (SNA) input shapers are proposed and designed based on the properties of the system. Results from the simulation of the manipulator responses with the controllers are presented in time and frequency domains. The performances of the control schemes are assessed in terms of level of vibration reduction, input tracking capability and time response specifications. Finally, a comparative assessment of the control techniques is presented and discussed.

Keywords: Flexible manipulator, vibration control, input shaping, LQR control, PID control

ABBREVIATIONS

AMM	-	Assumed Mode Method
IIR	-	Infinite Impulse Response
LQR	-	Linear Quadratic Regulator
LTI	-	Linear Time Invariant
NZVDD	-	Negative Zero-Vibration-Derivative-Derivative
PD	-	Proportional Derivative
PID	-	Proportional Integral Derivative
PSD	-	Power Spectral Density
PZVDD	-	Positive Zero-Vibration-Derivative-Derivative
SNA	-	Specified Negative Amplitude
UM	-	Unity-Magnitude
ZV	-	Zero-Vibration
ZVD	-	Zero-Vibration-Derivative
ZVDD	-	Zero-Vibration-Derivative-Derivative

Received: 3 March 2008
Accepted: 14 April 2009
[*]Corresponding Author

INTRODUCTION

Flexible manipulators exhibit many advantages over their rigid counterparts; among other, they require less material, are lighter in weight, have higher manipulation speed, lower power consumption, require smaller actuators, are more manoeuvrable and transportable and much safer to operate due to reduced inertia, as well as have less overall cost and higher payload to robot weight ratio. However, the control of flexible manipulators to maintain accurate positioning is challenging. Due to the flexible nature and distributed characteristics of the system, the dynamics are highly non-linear and complex. Problems arise due to precise positioning requirements, system flexibility leading to vibration, the difficulty in obtaining an accurate model of the system and the non-minimum phase characteristics of the system (Azad, 1995).

The control strategies for flexible manipulator systems can be classified as feedforward (open-loop) and feedback (closed-loop) control. In particular, the feedforward control techniques were mainly developed for vibration suppression which involved developing the control input through the consideration of the physical and vibrational properties of the system, so that the system vibrations could be reduced at the response modes. This method does not require any additional sensors or actuators and it also does not account for the changes in the system once the input is developed. A number of techniques have been proposed as the feedforward control schemes to control the vibration in the flexible structures. These include utilisation of Fourier expansion (Aspinwall, 1980), development of computed torque (Bayo, 1988), utilisation of single and multiple-switch bang-bang control functions (Onsay and Akay, 1991) and construction of input functions from the ramped sinusoids or versine functions (Meckl and Seering, 1990). Moreover, command shaping techniques have also been investigated in reducing the system vibration in flexible manipulators. These include filtering techniques based on low-pass, band-stop, and notch filters (Singhose *et al*., 1995; Tokhi and Poerwanto, 1996a) and input shaping (Singer and Seering, 1990; Mohamed and Tokhi, 2002). Previous experimental studies on a single-link flexible manipulator have shown that input shaping gives higher level of vibration reduction and robustness than filtering techniques. However, the major drawbacks of the feedforward control schemes are their limitations in coping with the parameter changes and the disturbances to the system (Khorrami *et al*., 1994). Moreover, the technique requires relatively precise knowledge of the dynamics of the system.

Investigations have also shown that with the input shaping technique, a system response with delay is obtained. To reduce the delay and thus increase the speed of the response, negative amplitude input shapers have been introduced and investigated in vibration control. The shaper duration can be shortened by allowing the shaper to contain negative impulses, while satisfying the same robustness constraint. A significant number of negative shapers for vibration control have also been proposed. These include negative unity-magnitude (UM) shaper, specified-negative-amplitude (SNA) shaper, negative zero-vibration (ZV) shaper, negative zero-vibration-derivative (ZVD) shaper and negative zero-vibration-derivative-derivative (ZVDD) shaper (Singhose *et al*., 1994; Singhose and Mills, 1999; Mohamed *et al*., 2006). Some comparisons made to compare the positive and negative input shapers for vibration control of a single-link flexible manipulator have also been reported (Mohamed *et al*., 2006).

In general, control of flexible manipulators can be made easier by locating every sensor exactly at the location of the actuator, as collocation of the sensors and actuators guarantees stable servo control. In the case of flexible manipulator systems, the end-point position is controlled by obtaining the parameters at the hub and the end-point of the manipulator, as well as using the measurements as a basis for applying control torque at the hub. Thus, the feedback control can be divided into collocated and non-collocated control. By applying the control torque based on the non-collocated sensors, the problems of non-minimum phase and achieving stability are of concern. Several

approaches which utilise closed-loop control strategies have been reported for control of flexible manipulators. These include linear state feedback control (Cannon and Schmitz, 1984; Hasting and Book, 1987), adaptive control (Feliu *et al*., 1990; Yang *et al*., 1992), robust control techniques based on H-infinity (Moser, 1993), and variable structure control (Moallem *et al*., 1998) as well as intelligent control based on the neural networks (Gutierrez *et al*., 1998) and fuzzy logic control schemes (Moudgal *et al*., 1994).

An important aspect of the flexible manipulator control which has received little attention is the interaction between the rigid and flexible dynamics of the links. An acceptable system performance with reduced vibration which accounts for system changes can be achieved by developing a hybrid control scheme that caters for rigid body motion and vibration of the system independently. This can be realised by utilising control strategies consisting of either non-collocated with collocated feedback controllers or feedforward with feedback controllers. In both cases, the former can be used for vibration suppression and the latter for input tracking of a flexible manipulator. A combination of the control techniques would practically position the end-point of the flexible manipulator from one point to another with reduced vibration. Both the feedforward and feedback control structures have been utilised in controlling flexible manipulator systems. A hybrid of the collocated and non-collocated controller has previously been proposed to control a flexible manipulator (Tokhi and Azad, 1996b). The controller design utilises end-point acceleration feedback through a proportional-integral-derivative (PID) control scheme and a proportional-derivative (PD) configuration to control rigid body motion. Experimental investigations have shown that the control structure gives a satisfactory system response with a significant vibration reduction as compared to the response with a collocated controller. A PD feedback control, with a feedforward control to regulate the position of a flexible manipulator, has also been proposed (Shchuka and Goldenberg, 1989). Results from the simulation showed that although the pole-zero cancellation property of the feedforward control could speed the response of the system up, it would increase overshoot and oscillation. A control law partitioning scheme which uses end-point sensing device has been reported (Rattan *et al*., 1990). The scheme uses the end-point position signal in an outer loop controller to control the flexible modes, whereas the inner loop controls the rigid body motion which is independent of the flexible dynamics of the manipulator. The performance of the scheme has been demonstrated in both simulation and experimental trials which have incorporated the first two flexible modes. A combined feedforward and feedback method, in which the end-point position is sensed by an accelerometer and fed back to the motor controller operating as a velocity servo, has been proposed to control a flexible manipulator system (Wells and Schueller, 1990). This particular method uses a single mass-spring-damper system to represent the manipulator and thus the technique is not suitable for a high speed operation.

This paper presents investigations into the development of techniques for the end-point vibration suppression and input tracking of a flexible manipulator. A constrained planar single-link flexible manipulator is considered. The control strategies based on the feedforward with LQR controllers and with combined non-collocated and LQR controllers have also been investigated. A simulation environment was developed within the Simulink® and Matlab® to evaluate the performance of the control schemes. In this work, the dynamic model of the flexible manipulator was derived using the assumed mode method (AMM). Some previous simulation and experimental studies have shown that the AMM method gives an acceptable dynamic characterisation of the actual system (Martins *et al*., 2003). Moreover, two modes of vibration are sufficient to describe the dynamic behaviour of the manipulator reasonably well. Therefore, an LQR controller which utilises full-state feedback was initially developed to control rigid body motion and thus demonstrate the effectiveness of the proposed control schemes. This was then extended to incorporate non-collocated and feedforward controllers for vibration suppression of the manipulator.

The end-point displacement feedback through a PID control configuration was developed for the non-collocated control, whereas in the feedforward scheme, the positive and modified SNA input shapers are utilised as these have been shown to be effective in reducing system vibration. The results from the simulation of the response of the manipulator to the controllers are presented in time and frequency domains. The performances of the control schemes are assessed in terms of their level of vibration reduction, input tracking capability and time response specifications. Finally, a comparative assessment of the control techniques is also presented and discussed.

THE FLEXIBLE MANIPULATOR SYSTEM

Fig. 1 shows the single-link flexible manipulator system considered in this work, where X_oOY_o and XOY represent the stationary and moving coordinates frames, respectively, and τ represents the applied torque at the hub. E, I, ρ, L, A and I_h represent the Young modulus, area moment of inertia, mass density per unit volume, length, cross-sectional area and hub inertia of the manipulator, respectively. In this work, the motion of the manipulator is confined to X_oOY_o plane. Transverse shear and rotary inertia effects are neglected, since the manipulator is long and slender. Thus, the Bernoulli-Euler beam theory is allowed to be used to model the elastic behaviour of the manipulator. The manipulator is assumed to be stiff in vertical bending and torsion, allowing it to vibrate dominantly in the horizontal direction and thus, the gravity effects are neglected. Moreover, the manipulator is considered to have a constant cross-section and uniform material properties throughout. In this study, an aluminium type flexible manipulator, with dimensions of $900 \times 19.008 \times 3.2004$ mm^3, $E = 71 \times 10^9$ N/m^2, $I = 5.1924 \times 10^{11}$ m^4, $\rho = 2710$ kg/m^3 and $I_h = 5.8598 \times 10^{-4}$ kgm^2, was considered. These parameters constitute a single-link flexible manipulator experimental-rig which was developed to test and verify the control algorithms (Tokhi *et al*., 2001).

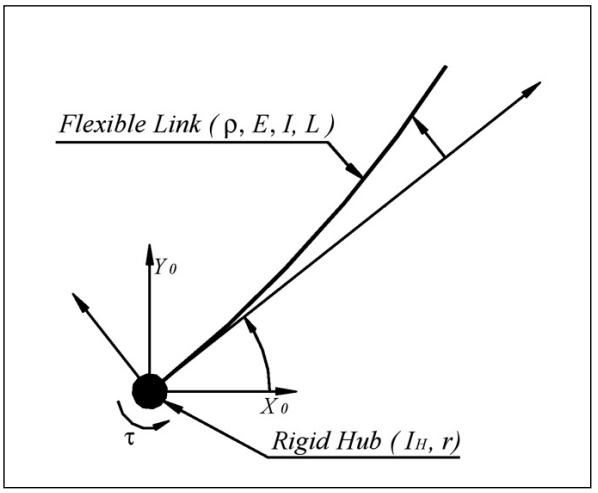


Fig. 1: Description of the flexible manipulator system

MODELLING OF THE FLEXIBLE MANIPULATOR

This section provides a brief description on the modelling of the flexible manipulator system, which serves as a basis of a simulation environment for the development and assessment of the control schemes. The AMM with two modal displacements is considered in characterising the dynamic behaviour of the manipulator incorporating structural damping and hub inertia. Further details of the description and derivation of the dynamic model of the system can be found in Subudhi and Morris (2002). The dynamic model has also been validated through experimental exercises where a close agreement between both theoretical and experimental results has been achieved in Martins *et al*. (2003).

Considering revolute joints and motion of the manipulator on a two-dimensional plane, the kinetic energy of the system can thus be formulated as:

$$T = \frac{1}{2}(I_H + I_b)\dot{\theta}^2 + \frac{1}{2}\rho \int_0^L (\dot{v}^2 + 2\dot{v}x\dot{\theta})\,dx \tag{1}$$

Where, I_b is the beam rotation inertia about the origin O as if it were rigid. The potential energy of the beam could be formulated as:

$$U = \frac{1}{2}\int_0^L EI\left(\frac{\partial^2 v}{\partial x^2}\right)^2 dx \tag{2}$$

This expression states the internal energy which is due to the elastic deformation of the link as it bends. The potential energy due to gravity is not accounted for since only the motion in the plane perpendicular to the gravitational field is considered.

Next, the energy expressions in Equations (1) and (2) are used to formulate the Lagrangianto $L = T - U$ obtain a closed-form dynamic model of the manipulator. Assembling the mass and stiffness matrices and utilising the Euler-Lagrange equation of motion, the dynamic equation of motion of the flexible manipulator system can be obtained as:

$$M\ddot{Q}(t) + D\dot{Q}(t) + KQ(t) = F(t) \tag{3}$$

Where, *M, D* and *K* are global mass, damping and stiffness matrices of the manipulator, respectively. The damping matrix is obtained by assuming the manipulator which exhibits the characteristic of Rayleigh damping. *F(t)* is a vector of the external forces and *Q(t)* is a modal displacement vector which is given as:

$$Q(t) = \begin{bmatrix}\theta & q_1 & q_2 & \ldots & q_n\end{bmatrix}^T = \begin{bmatrix}\theta & q^T\end{bmatrix}^T \tag{4}$$

$$F(t) = \begin{bmatrix}\tau & 0 & 0 & \ldots & 0\end{bmatrix}^T \tag{5}$$

Here, q_n is the modal amplitude of the i th clamped-free mode considered in the assumed modes method procedure and n represents the total number of the assumed modes. The model of the uncontrolled system could be represented in a state-space form as:

$$\begin{aligned}\dot{x} &= Ax + Bu \\ y &= Cx\end{aligned} \tag{6}$$

with the vector $x = \begin{bmatrix}\theta & \dot{\theta} & q_1 & q_2 & \dot{q}_1 & \dot{q}_2\end{bmatrix}^T$ and the matrices **A** and **B** are given by:

$$\mathrm{A} = \begin{bmatrix} 0_{3\times3} & I_{3\times3} \\ -M^{-1}K & -M^{-1}D \end{bmatrix}, \quad \mathrm{B} = \begin{bmatrix} 0_{3\times1} \\ M^{-1} \end{bmatrix}$$
$$\mathrm{C} = \begin{bmatrix} I_{1\times3} & 0_{1\times3} \end{bmatrix}, \qquad \mathrm{D} = \begin{bmatrix} 0 \end{bmatrix} \tag{7}$$

CONTROL SCHEMES

In this section, control schemes for rigid body motion control and vibration suppression of a flexible manipulator are proposed. Initially, an LQR controller was designed. Then, a non-collocated PID control and feedforward control based on input shaping were incorporated in the closed-loop system to control vibration of the system.

LQR Controller

A more common approach in the control of the manipulator systems involves the utilizatio of LQR design (Ogata, 1997). Such an approach was adopted at this stage of the investigation. Therefore, a linear state-space model of the flexible manipulator was obtained by linearising the equations of the system motion to design the LQR controller. For a LTI system:

$$\dot{x} = Ax + Bu, \tag{8}$$

The technique involves choosing a control law $u = \psi(x)$ which stabilizes the origin (i.e. regulates x to zero), while minimizing the quadratic cost function:

$$J = \int_0^\infty x(t)^T Qx(t) + u(t)^T Ru(t)\,dt \tag{9}$$

Where, $Q = Q^T$ and $R = R^T > 0$. The term "linear-quadratic" refers to the linear system dynamics and the quadratic cost function.

The matrices Q and R are called the state and control penalty matrices, respectively. If the components of Q are chosen largely relative to those of R, the deviations of x from zero will then be penalized heavily and relatively to the deviations of u from zero. On the other hand, if the components of R re largely relative to those of Q, the control effort will then be more costly and the state will not converge to zero as quickly.

A famous and somewhat surprising result due to Kalman is that the control law which minimizes J always takes the form $u = \psi(x) = -Kx$. The optimal regulator for a LTI system, with respect to the quadratic cost function above, is always a linear control law. With this observation in mind, the closed-loop system takes the following form:

$$\dot{x} = (A - BK)x \tag{10}$$

and the cost function J takes the form:

$$J = \int_0^\infty x(t)^T Qx(t) + (-Kx(t))^T R(-Kx(t))\,dt \tag{11}$$

$$J = \int_0^\infty x(t)^T (Q + K^T RK)x(t)\,dt$$

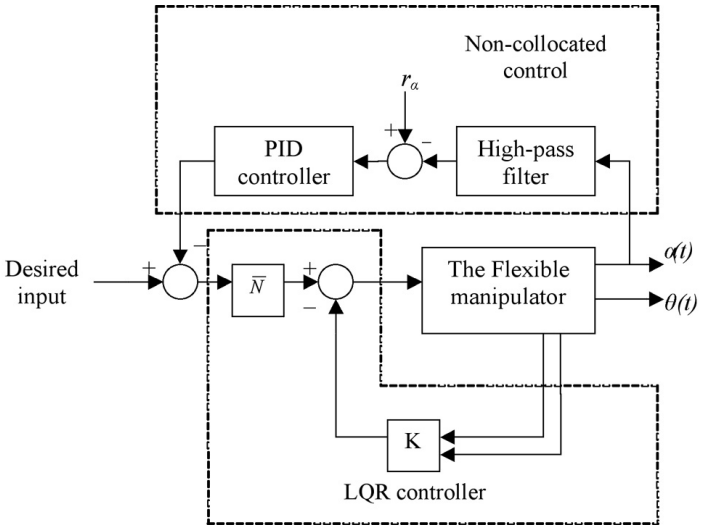


Fig. 2: The LQR and non-collocated PID control structure

Assuming that the closed-loop system is internally stable, which is a fundamental requirement for any feedback controller, the following theorem allows the computation value of the cost function for a given control gain matrix *K*.

LQR with Non-collocated Control

A combination of full-state feedback and non-collocated control scheme to control rigid body motion and vibration suppression of the system is presented in this section. As more reliable output measurement is obtained, the use of a non-collocated control system can be applied to improve the overall performance, where the end-point of the manipulator is controlled by measuring its position. The control structure comprises two feedback loops: (1) the full-state feedback as input to optimize the control gain matrix for rigid body motion control, and (2) the end-point residual (elastic deformation) as input to a separate non-collocated control law for vibration control. These two loops are then summed together to give a torque input to the system. A block diagram of the control scheme is shown in *Fig. 2*, in which α represents the end-point residual. Meanwhile, r_α represents the end-point residual reference input, which is set to zero as the control objective is to have zero vibration during movement of the manipulator.

For rigid body motion control, the LQR control strategy developed in the previous section was adopted, whereas the end-point residual feedback through a PID control scheme was utilised for the vibration control loop. For the two control loops to work well, they have to be decoupled from one another. This can be achieved using a high-pass filter in the non-collocated control loop.

LQR with Feedforward Control

A control structure used to control rigid body motion and vibration suppression of the flexible manipulator based on the LQR and feedforward control is proposed in this section. For feedforward controller, the positive and modified specified negative amplitude (SNA) input shapers were proposed and designed based on the properties of the system. In this study, the feedforward control scheme was developed using a ZVDD input shaping technique for both positive and negative shapers.

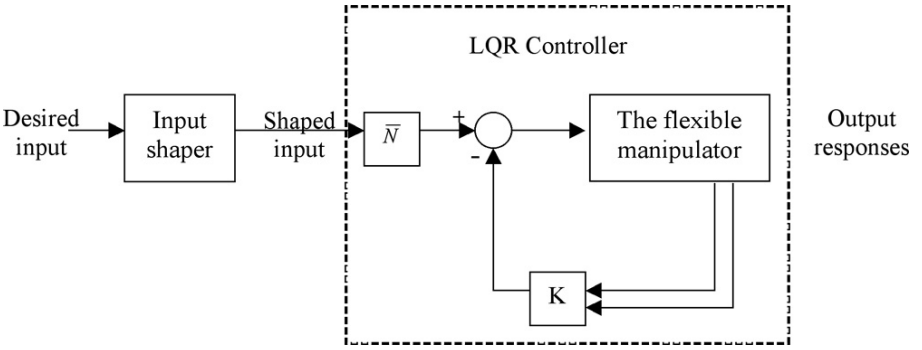


Fig. 3: The LQR and input shaping control structure

An experimental study previously conducted with a flexible manipulator showed that significant vibration reduction and robustness was achieved using a ZVDD technique (Mohamed and Tokhi, 2002). *Fig. 3* depicts a block diagram of the LQR with input shaping control technique.

The input shaping method involves convolving a desired command with a sequence of impulses known as input shaper. The objectives of the design were to determine the amplitude and time location of the impulses based on the natural frequencies and damping ratios of the system. The positive input shapers have been used in most input shaping schemes. The requirement of positive amplitude for the impulses is to avoid the problem of large amplitude impulses. In this case, each individual impulse must be less than one to satisfy the unity magnitude constraint. In addition, the robustness of the input shaper to errors in natural frequencies of the system can be increased by solving the derivatives of the system vibration equation. This yields a positive ZVDD shaper with parameter as:

$$t_1 = 0,\ t_2 = \frac{\pi}{\omega_d},\ t_3 = \frac{2\pi}{\omega_d},\ t_4 = \frac{3\pi}{\omega_d}, \tag{12}$$

$$A1 = \frac{1}{1 + 3H + 3H^2 + H^3},\ A2 = \frac{3H}{1 + 3H + 3H^2 + H^3}$$

$$A_3 = \frac{3H^2}{1 + 3H + 3H^2 + H^3},\ A_4 = \frac{H^3}{1 + 3H + 3H^2 + H^3}$$

where

$$H = e^{-\zeta\pi/\sqrt{1-\zeta^2}} \quad , \qquad \omega_d = \omega_n\sqrt{1-\zeta^2}$$

ω_n and ζ represent the natural frequency and damping ratio, respectively. As for the impulses, t_j and A_j are the time location and amplitude of the impulse j, respectively.

Input shaping techniques based on the positive input shaper has been proven to be able to reduce vibration of a system. The duration of the shaper is increased to achieve higher robustness, and thus, increase the delay incurred in the system response. The shaper duration can be shortened by allowing the shaper to contain negative impulses, while satisfying the same robustness constraint. Therefore, to include negative impulses in a shaper requires the impulse amplitudes to switch between 1 and -1 as:

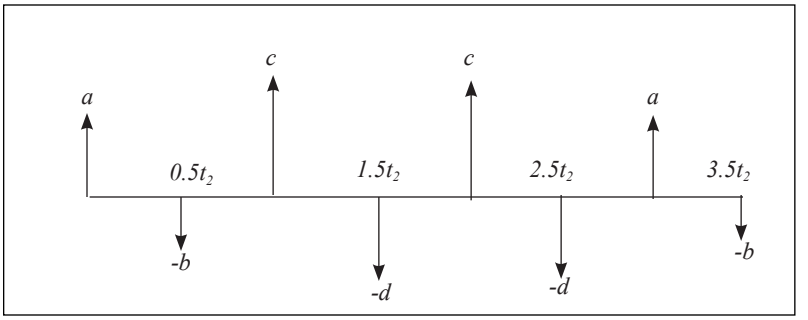


Fig. 4: Modified SNA-ZVDD shaper

$$A_i = (-1)^{i+1}; \quad i = 1, \ldots \ldots, n \tag{13}$$

The constraint in Equation (13) yields useful shapers as they can be used with a wide variety of inputs. In this work, the previous SNA input shaper (Mohamed *et al*., 2006) was modified by locating the negative amplitudes at the centre between each positive impulse sequences with the even number of the total impulses. This made the shaper duration as one-fourth of the vibration period of an undamped system as shown in *Fig. 4*. The modified SNA ZVDD shaper was proposed and applied in this work to enhance the robustness capability of the controller while increasing the speed of the system response. By considering the form of the modified SNA-ZVDD shaper (shown in *Fig. 4*), the amplitude summation constraints equation can be obtained as:

$$2a + 2c - 2b - 2d = 1 \tag{14}$$

The values of *a*, *b, c,* and *d* can be set to any values which satisfy the constraint in Equation (14). However, the suggested values of *a*, *b, c,* and *d* are less than |1| so as to avoid the increase of the actuator effort.

IMPLEMENTATION AND RESULTS

In this section, the proposed control schemes are implemented and tested within the simulation environment of the flexible manipulator, and the corresponding results are presented. The manipulator is required to follow a trajectory within the range of ± 0.8 radian as shown in *Fig. 5*. System responses namely the end-point trajectory, displacement, and end-point acceleration are also observed. To investigate the vibration of the system in the frequency domain, power spectral density (PSD) of the end-point acceleration response is obtained. The performances of the control schemes are assessed in terms of their vibration suppression, input tracking, and time response specifications. Finally, a comparative assessment of the performance of the control schemes is presented and discussed.

LQR Controller

In this investigation, the tracking performance of the LQR applied to the flexible manipulator was investigated by setting the value of vector K and $\overline{N}$ to determine the feedback control law and eliminate steady state error capability, respectively. For the single-link flexible manipulator (described by the state-space model given by Equation 6) and with M, K, and D matrices calculated earlier, the LQR gain matrix for

$$Q = \begin{bmatrix} I_{3\times3} & 0_{3\times3} \\ 0_{3\times3} & 0_{3\times3} \end{bmatrix} \text{ and } R = 1$$

was calculated using the Matlab® and was therefore found to be:

$$K = [3.1623 \;\; 4.1006 \;\; 42.7052 \;\; 0.4956 \;\; 0.6449 \;\; 6.7017]$$

$$\bar{N} = [3.1623]$$

Fig. 6 shows the responses of the flexible manipulator to the reference input trajectory in the time-domain and frequency domain (PSD). These results were considered as the system response under rigid body motion control and were used to evaluate the performance of the non-collocated PID and feedforward control. The steady-state end-point trajectory of +0.8 radian for the flexible manipulator was achieved within the rise and settling times, and overshoot of 0.421 s, 1.233 s, and 6.06%, respectively. The manipulator was found to reach the required position from +0.8 rad to -0.8 rad within 2 s, with little overshoot. However, a noticeable amount of vibration was detected during the movement of the manipulator. From the displacement response, the vibration of the system was noted to settle within 1 s with a maximum residual of ±0.15 m. This is similar for the end-point acceleration response, whereby the vibration of the system was indicated to settle within 0.5 s with a maximum acceleration of ±600 m/s^2. Moreover, from the PSD of the end-point acceleration response the vibrations at the end-point are dominated by the first two vibration modes, which were obtained as 16 and 56 Hz.

QR with Non-collocated and Feedforward Control

In the full-state feedback and the non-collocated control scheme of LQR-PID, the PID controller parameters were tuned with the Ziegler-Nichols method using a closed-loop technique, where the proportional gain K_p was initially tuned and the integral gain K_i and derivative gain K_d were then calculated (Warwick, 1989). Accordingly, the PID parameters K_p, K_i, and K_d were deduced as 0.7, 5 and 0.03, respectively. A third-order infinite impulse response (IIR) Butterworth high-pass filter was utilised to decouple the end-point measurement from the rigid body motion of the manipulator. In this investigation, a high-pass filter with the cut-off frequency of 5 Hz was designed.

In the case of the LQR and feedforward control scheme, the combination of the LQR with positive ZVDD shaper (LQR-PZVDD) and the modified SNA ZVDD shaper (LQR-NZVDD) were respectively designed, based on the dynamic behaviour of the closed-loop system, which was obtained using only the LQR control. As demonstrated in the previous section, the natural frequencies of the manipulator were 16 Hz and 56 Hz. Previous experimental results showed that the damping ratio of the flexible manipulator ranged from 0.024 to 0.1 (Azad, 1994). In this work, however, the damping ratios were deduced as 0.086 and 0.096 for the first two modes, respectively. The magnitudes and time locations of the impulses for positive shaper were obtained by solving Equation (12) for the first two modes. However, the amplitudes of the modified SNA ZVDD shaper were deduced as [0.3 -0.1 0.5 -0.2 0.5 -0.2 0.3 -0.1], and the time locations of the impulses were chosen at the half of the time locations of positive ZVDD shaper, as shown in *Fig. 4*. As for the digital implementation of the input shaper, the locations of the impulses were selected at the nearest sampling time. The developed input shaper was then used to pre-process the input reference shown in *Fig. 5*.

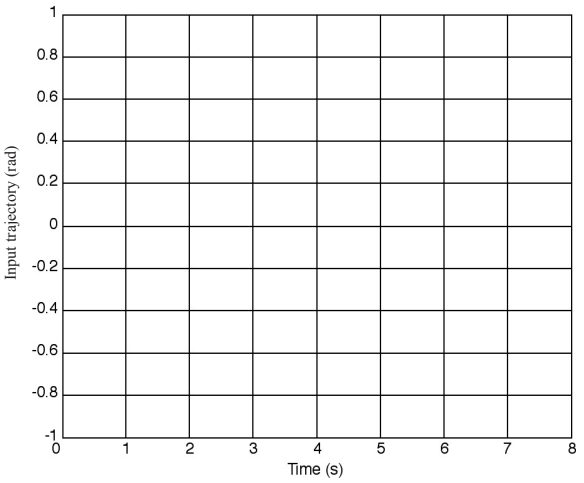


Fig. 5: The reference input trajectory

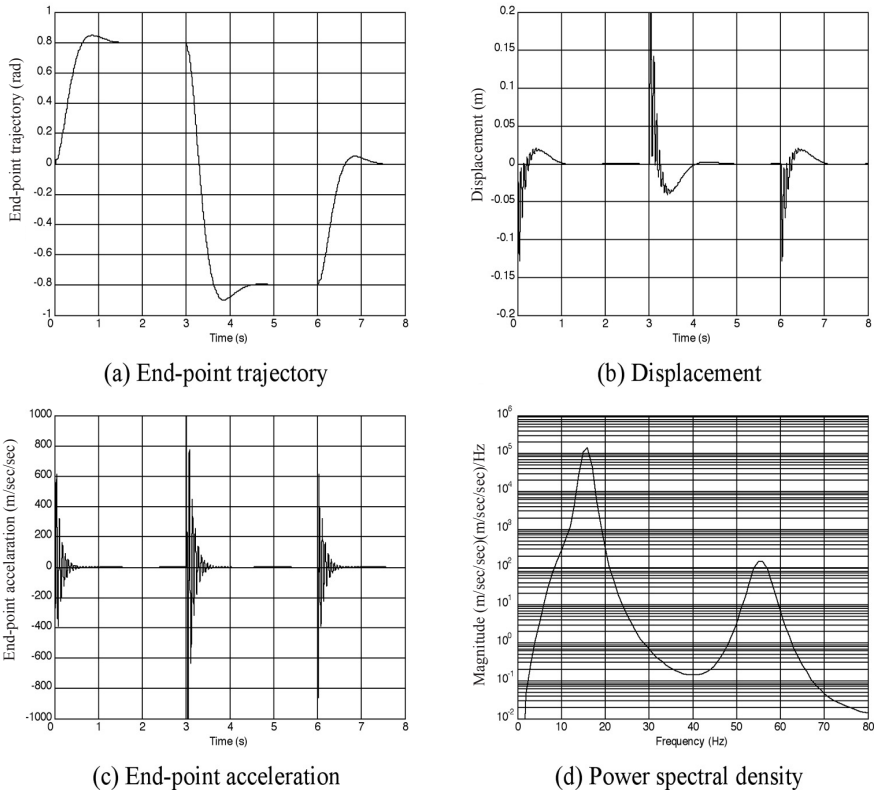
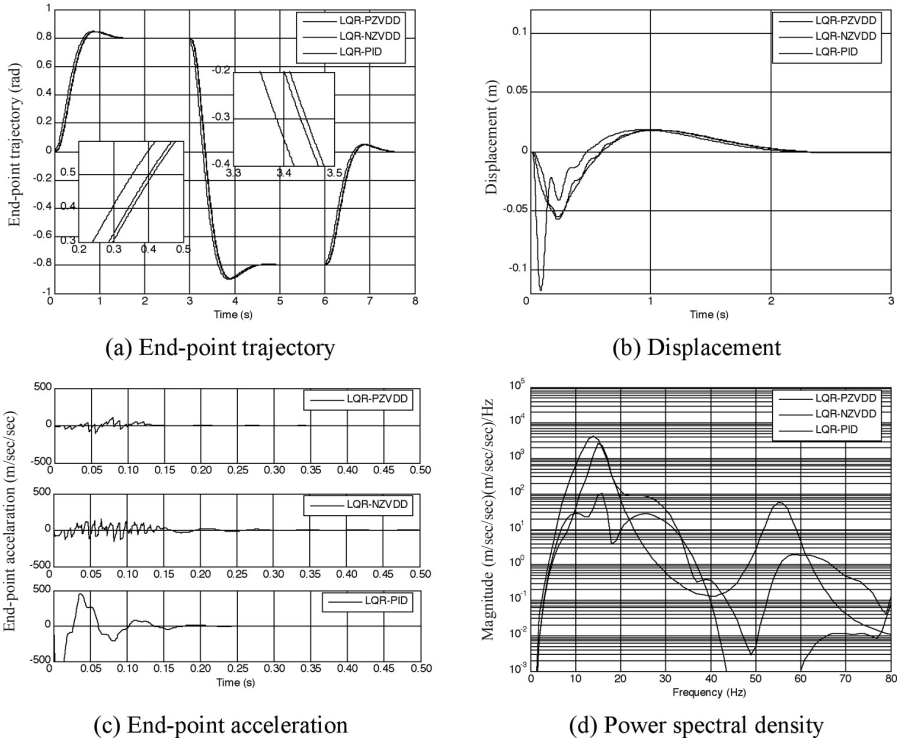


Fig. 6: Response of the manipulator with the LQR control



(a) End-point trajectory (b) Displacement

(c) End-point acceleration (d) Power spectral density

Fig. 7: Response of the manipulator with the LQR-PZVDD, LQR-NZVDD and LQR-PID control

TABLE 1
Level of vibration reduction of the end-point acceleration and specifications of end-point trajectory response for hybrid control schemes

Controller	Attenuation (dB) of vibration end-point acceleration		Specifications of end-point trajectory response		
	Mode 1	Mode 2	Rise time (s)	Settling time (s)	Overshoot (%)
LQR – PID	37.14	8.04	0.418	1.232	6.06
LQR - PZVDD	62.59	146.73	0.423	1.291	6.00
LQR - NZVDD	35.04	40.14	0.424	1.280	5.99

The corresponding responses of the manipulator are shown in *Fig. 7*. The proposed control schemes were found to be capable of reducing the system vibration while maintaining the input tracking performance of the manipulator. Similar end-point trajectory, displacement, and end-point acceleration responses were also observed as compared to the LQR controller. Table 1 summarises the levels of vibration reduction of the system responses at the first two modes as compared to the LQR control. In overall, the highest levels of vibration reduction for the first two modes

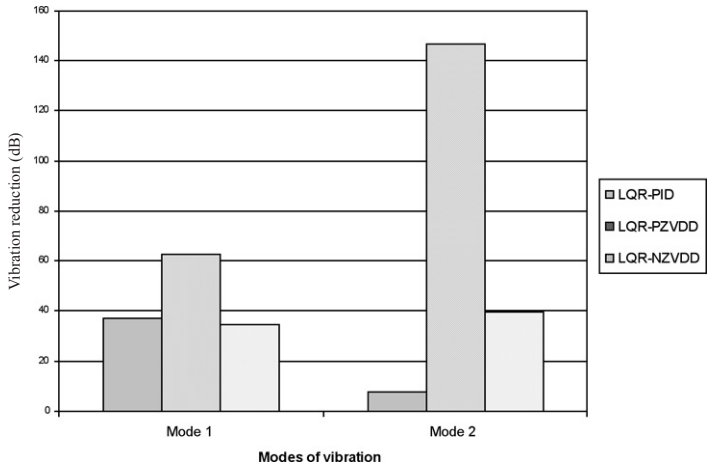


Fig. 8: Level of vibration reduction with the LQR-PID, LQR-PZVDD and LQR-NZVDD control at the end-point of the manipulator

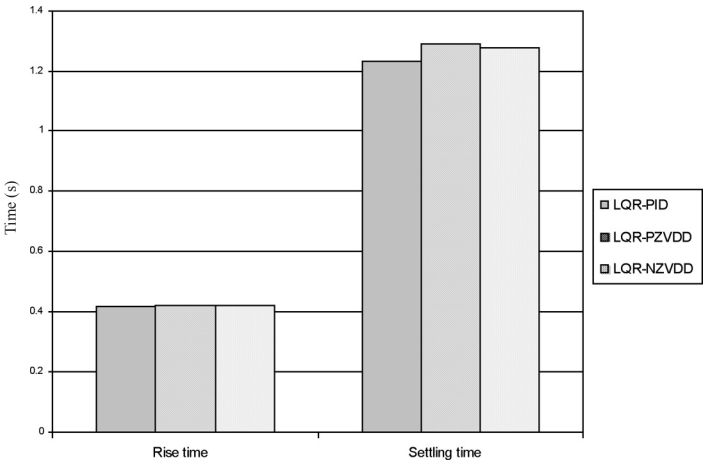


Fig. 9: Rise and settling times of the end-point trajectory with the LQR-PID, LQR-PZVDD and LQR-NZVDD control

were obtained using the LQR-PZVDD, and this was followed by the LQR-NZVDD and LQR-PID. However, the fastest system response was obtained using the LQR-PID, followed by the LQR NZVDD and LQR-PZVDD. Meanwhile, the impulses sequence in input shaper was found to increase the delay in the system response with the use of the feedforward controller. Table 1 depicts the corresponding rise time, setting time and overshoot of the end-point trajectory response using the LQR-PZVDD, LQR-NZVDD and LQR-PID. Moreover, the minimum phase behaviour of the manipulator was found to be unaffected, as demonstrated in the end-point trajectory response with the LQR-PID control. A significant amount of vibration reduction was demonstrated at the end-point of the manipulator with both control schemes. The maximum displacement at the end-point is ±0.1 m while with the LQR-PZVDD and LQR-NZVDD control is ±0.05 m when the LQR-PID control is used. A similar pattern was shown for the end-point acceleration result with the

maximum accelerations of ±100 m/s^2, ±200 m/s^2 and ±500 m/s^2 for LQR-PZVDD, LQR-NZVDD and LQR-PID, respectively. Hence, the magnitude of oscillation was found to be significantly reduced using the LQR with the feedforward control as compared to the case of the LQR with the non-collocated PID control. Overall, the performance of the control schemes at the input tracking capability is maintained as the LQR control.

The results from the simulation show that the performance of LQR-PZVDD control scheme is better than LQR-NZVDD and LQR-PID schemes in suppressing the vibration of the flexible manipulator. This is further evidenced in *Fig. 8*, whereby the level of vibration reduction at the resonance modes of the LQR with the non-collocated and feedforward control is respectively shown as compared to the LQR controller. Higher vibration reduction is achieved with the use of LQR-PZVDD at the first two modes of vibration. Almost two-fold and more than four-fold improvements were observed in the vibration reduction in the first and second resonance modes, respectively using the LQR-PZVDD as compared to using LQR-NZVDD and LQR-PID. Moreover, the implementation of the LQR with feedforward control is easier than the application of the LQR with the non-collocated PID control as a large amount of design effort is required to determine the best PID parameters. It is important to note that a properly tuned PID could produce better results. Nevertheless, slightly slower response was obtained using the LQR with the feedforward control as compared to the LQR with the non-collocated control, as demonstrated in the end-point trajectory response. *Fig. 9* summarizes the comparisons of the specifications of the end-point trajectory responses for the rise and settling times. Thus, the work developed and reported in this paper forms the basis for designing and developing the hybrid control schemes for input tracking and vibration suppression of multi-link flexible manipulator systems which can be extended to and adopted in other practical applications.

CONCLUSION

The development of techniques for end-point vibration suppression and input tracking of a flexible manipulator has been presented. The control schemes have been developed based on the LQR with non-collocated PID control and the LQR with feedforward control based on positive and modified SNA input shaper techniques. The proposed control schemes have been implemented and tested within a simulation environment of a single-link flexible manipulator. The performances of the control schemes have been evaluated in terms of the end-point vibration suppression and input tracking capability at the resonance modes of the manipulator. Meanwhile, acceptable performance at the end-point vibration suppression and input tracking control has been achieved using the proposed control strategies. A comparative assessment of the control schemes has shown that the LQR control, with input shaping (feedforward), performs better than the LQR with non-collocated PID control in terms of vibration reduction at the end-point of the manipulator. However, the speed of the response is slightly improved at the expenses of decreasing the level of vibration reduction using the LQR with non-collocated PID control. Therefore, the proposed controllers can be concluded as being capable of reducing the system vibration, while maintaining the input tracking performance of the manipulator.

REFERENCES

Aspinwall, D.M. (1980). Acceleration profiles for minimising residual response. *Transactions of ASME: Journal of Dynamic Systems, Measurement and Control*, *102*(1), 3-6.

Azad, A.K.M. (1994). *Analysis and design of control mechanism for flexible manipulator systems*. PhD. Thesis, Department of Automatic Control and Systems Engineering, University of Sheffield, UK.

Bayo, E. (1988). Computed torque for the position control of open-loop flexible robots. *Proceedings of IEEE International Conference on Robotics and Automation* (pp.316-321). Philadelphia.

Cannon, R.H. and Schmitz, E. (1984). Initial experiment on the end-point control of a flexible one-link robot. *International Journal of Robotics Research*, *3*(3), 62-75.

Feliu, V., Rattan, K.S. and Brown, H.B. (1990) Adaptive control of a single-link flexible manipulator. *IEEE Control Systems Magazine*, *10*(2), 29 –33.

Gutierrez, L.B., Lewis, P.L. and Lowe, J.A. (1998). Implementation of a neural network tracking controller for a single flexible link: Comparison with PD and PID controllers. *IEEE Transactions on Industrial Electronics*, *45*(3), 307-318.

Hasting, G.G. and Book, W.J. (1987). A linear dynamic model for flexible robot manipulators. *IEEE Control Systems Magazine*, *7*, 61-64.

Khorrami, F., Jain, S. and Tzes, A. (1994). Experiments on rigid body-based controllers with input preshaping for a two-link flexible manipulator. *IEEE Transactions on Robotics and Automation*, *10*(1), 55-65.

Martins, J.M., Mohamed, Z., Tokhi, M.O., Sá da Costa, J. and Botto, M.A. (2003). Approaches for dynamic modelling of flexible manipulator systems. *IEE Proceedings-Control Theory and Application*, *150*(4), 401-411.

Meckl, P.H. and Seering, W.P. (1990). Experimental evaluation of shaped inputs to reduce vibration of a Cartesian robot. *Transactions of ASME: Journal of Dynamic Systems, Measurement and Control*, *112*(6), 159-165.

Moallem, M., Khorasani, K. and Patel, R.V. (1998). Inversion-based sliding control of a flexible-link manipulator. *International Journal of Control*, *71*(3), 477-490.

Mohamed, Z. and Tokhi, M.O. (2002). Vibration control of a single-link flexible manipulator using command shaping techniques. *Proceedings IMechE-I: Journal of Systems and Control Engineering*, *216*, 191-210.

Mohamed, Z., Chee, A.K., Mohd Hashim, A.W.I., Tokhi, M.O., Amin, S.H.M. and Mamat, R. (2006). Techniques for vibration control of a flexible manipulator. *Robotica*, *24*, 499-511.

Moser, A.N. (1993). Designing controllers for flexible structures with H-infinity/μ-synthesis. *IEEE Control Systems Magazine*, *13*(2), 79-89.

Moudgal, V.G., Passino, K.M. and Yurkovich, S. (1994). Rule-based control for a flexible-link robot. *IEEE Transactions on Control Systems Technology*, *2*(4), 392-405.

Ogata, K. (1997). *Modern Control Engineering*. Upper Saddle River, NJ: Prentice-Hall International.

Onsay, T. and Akay, A. (1991). Vibration reduction of a flexible arm by time optimal open-loop control. *Journal of Sound and Vibration*, *147*(2), 283-300.

Rattan, K.S., Feliu, V. and Brown, H.B. (1990). Tip position control of flexible arms. *Proceedings of the IEEE Conference on Decision and Control* (pp.1803-1808). Honolulu.

Shchuka, A. and Goldenberg, A.A. (1989). Tip control of a single-link flexible arm using feedforward technique. *Mechanical Machine Theory*, *24*, 439-455.

Singer, N.C. and Seering, W.P. (1990). Preshaping command inputs to reduce system vibration. *Transactions of ASME: Journal of Dynamic Systems, Measurement and Control*, *112*(1), 76-82.

Singhose, W., Singer, N.C. and Seering, W.P. (1994). Design and implementation of time-optimal negative input shapers. *Proceedings of International Mechanical Engineering Congress and Exposition* (pp. 151-157). Chicago.

Singhose, W.E., Singer, N.C. and Seering, W.P. (1995). Comparison of command shaping methods for reducing residual vibration. *Proceedings of European Control Conference* (pp. 1126-1131). Rome.

Singhose, W. and Mills, B.W. (1999). Command generation using specified-negative-amplitude input shapers. *Proceedings of the American Control Conference* (pp. 61-65). San Diego, California.

Subudhi, B. and Morris, A.S. (2002). Dynamic modelling, simulation and control of a manipulator with flexible links and joints. *Robotics and Autonomous Systems*, *41*, 257-270.

Tokhi, M.O. and Poerwanto, H. (1996a). Control of vibration of flexible manipulators using filtered command inputs. *Proceedings of International Congress on Sound and Vibration* (pp. 1019-1026). St. Petersburg.

Tokhi, M.O. and Azad, A.K.M. (1996b). Control of flexible manipulator systems. *Proceedings IMechE-I: Journal of Systems and Control Engineering*, *210*, 113-130.

Tokhi, M.O., Mohamed, Z. and Shaheed, M.H. (2001). Dynamic characterisation of a flexible manipulator system. *Robotica*, *19*(5), 571-580.

Wells, R.L. and Schueller, J.K. (1990). Feedforward and feedback control of a flexible manipulator. *IEEE Control System Magazine*, *10*, 9-15.

Warwick, K. (1989). *Control Systems: An Introduction*. London: Prentice Hall.

Yang, T.-C., Yang, J.C.S. and Kudva, P. (1992). Load-adaptive control of a single-link flexible manipulator systems. *IEEE Transactions on Systems, Man and Cybernetics*, *22*(1), 85-91.